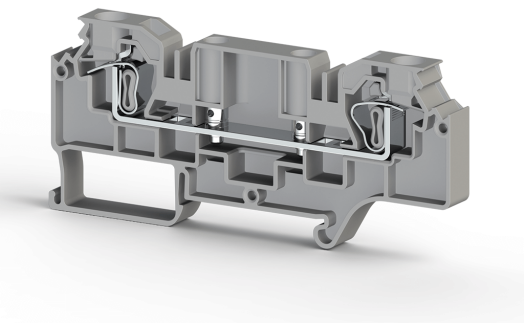

TERMINAL BLOCKS > SPRING CLAMP TYPE TERMINAL BLOCKS > TEST AND DISCONNECT TERMINALS

WGO D5 Grey

Stock Keeping Unit (SKU): 376290

Screw Type, 6 mm² test and disconnect terminal block

Commercial Information

Product Sales Code	**376290**
Package Unit	**40 pcs.**
Customs Tariff Number	**853690950000**
Weight Per Unit Including Packaging	**0.024 kg.**

Technical Information

PRODUCT SPECIFICATIONS	
Number of Connections	**2**
Color	**Grey**
Number of Levels	**1**
Insulation Material	**PA**
UL 94 Flammability Class	**V2**
Impulse Voltage Category	**III**
Insulation Material Group	**I**
Pollution Degree	**3**
Connection According to Standard	**IEC 60947-7-1**
Continuous Operating Temperature Max.	**120 °C**
Continuous Operating Temperature Min.	**-55 °C**

ELECTRICAL SPECIFICATIONS	
Nominal Impulse Voltage	**6 Kv**

Nominal Current	**41 A**
Nominal Voltage	**500 V**
Maximum Load Current	**57 A**

CONNECTION DATA

Connection Type	**Spring Connection**
Min. Solid Conductor Cross-Sectional Area	**0,2 mm²**
Max. Solid Conductor Cross-Sectional Area	**10 mm²**
Conductor Cross-Section AWG/kcmil Min.	**24 AWG**
Conductor Cross-Section AWG/kcmil Max.	**8 AWG**
Min. Stranded Conductor Cross-Sectional Area	**0,2 mm²**
Max. Stranded Conductor Cross-Sectional Area	**6 mm²**
Min. Stranded Conductor Cross-Sectional Area with Ferrule	**0,25 mm²**
Max. Stranded Conductor Cross-Sectional Area with Ferrule	**6 mm²**
Min. Stripping Length	**10 mm**
Max. Stripping Length	**12 mm**
Internal Cylindrical Indicator	**A5**
2 Stranded Conductors of the Same Cross-Section with Plastic-Collared Twin Ferrule	**1,5 mm²**

DIMENSIONS

Width	**8 mm**
Length	**95,35 mm**
Height MR 35x7.5	**43,00 mm**
Height MR 35x15	**50,50 mm**

Certificates

CE EAC ROHS UKRAYNA UKCA

Accessories

END STOP



Product Code: 495049

KD 3 Grey



Product Code: 495059

KD 4 Grey



Product Code: 495219

KD 7 Grey

ZINC COATED



Product Code: 500601

MR 35x7.5 Straight (1m) Zinc Coated Rail



Product Code: 500604

MR 35x7.5 Slotted DIN Rail (2 m), Galvanized



Product Code: 500609

MR 35x15 Slotted (2m) Zinc Coated Rail



Product Code: 500602

MR 35x7.5 Slotted (1m) Zinc Coated Rail



Product Code: 500603

MR 35x7.5 Straight (2m) Zinc Coated Rail



Product Code: 500606

MR 35x15 Straight (1m) Zinc Coated Rail



Product Code: 500608

MR 35x15 Straight (2m) Zinc Coated Rail

ÇINKO KAPLI



Product Code: 500607

MR 35x15 Slotlu (1m) Çinko Kaplı Ray

GALVANIZED



Product Code: 500602E

MR 35x7.5 Slotted (1m) Rail (Galvanized)



Product Code: 500603E

MR 35x7,5 Plain (2m) Rail (Galvanized)



Product Code: 500604E

MR 35x7,5 SLOT (2m) RAIL (GALVANIZED)



Product Code: 500609E

MR 35x15 Slotted (2m) Rail (Galvanized)

TEST SOCKETS



Product Code: 493050

TF (Ø 4)

END PLATE/COVER



Product Code: 450359

NPP/WGO 5 Grey

SEPARATION PLATE



Product Code: 463219

APP/WGO 5 Grey

PLUG-IN CROSS CONNECTOR



Product Code: 476242

UK 6/2



Product Code: 476243

UK 6/3



Product Code: 476244

UK 6/4



Product Code: 476249

UK 6/10

PROFILE COVER

Product Code: 498260

WGO 5 Protection Cover Transparent

TERMINAL STRIP LABELS

Product Code: 1020100

SLF-P1 W 11,2mm x 15m