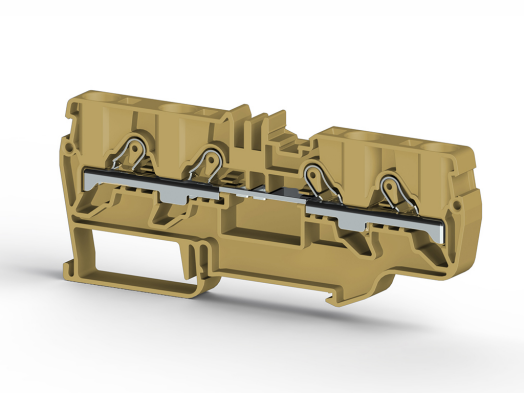

TERMINAL BLOCKS > PUSH-IN TYPE TERMINAL BLOCKS > MULTI-CONDUCTOR TERMINAL BLOCKS

PYK 6C Beige

Stock Keeping Unit (SKU): 307640

6 mm² Push-In 4-Pole Feed-Through Terminal Block

Commercial Information

Product Sales Code	**307640**
Package Unit	**35 pcs.**
Customs Tariff Number	**853690950000**
Weight Per Unit Including Packaging	**0.024405 kg.**

Technical Information

PRODUCT SPECIFICATIONS	
Number of Connections	**4**
Color	**Beige**
Number of Levels	**1**
Insulation Material	**PA**
UL 94 Flammability Class	**V2**
Impulse Voltage Category	**III**
Insulation Material Group	**I**
Pollution Degree	**3**
Connection According to Standard	**IEC 60947-7-1**
Continuous Operating Temperature Max.	**120 °C**
Continuous Operating Temperature Min.	**-55 °C**

ELECTRICAL SPECIFICATIONS	
Nominal Impulse Voltage	**8 Kv**

Nominal Current	**41 A**
Nominal Voltage	**800 V**
Maximum Load Current	**57 A**

CONNECTION DATA

Connection Type	**Push-In Connection**
Min. Solid Conductor Cross-Sectional Area	**0,5 mm²**
Max. Solid Conductor Cross-Sectional Area	**10 mm²**
Conductor Cross-Section AWG/kcmil Min.	**20 AWG**
Conductor Cross-Section AWG/kcmil Max.	**8 AWG**
Min. Stranded Conductor Cross-Sectional Area	**0,5 mm²**
Max. Stranded Conductor Cross-Sectional Area	**6 mm²**
Min. Stranded Conductor Cross-Sectional Area with Ferrule	**0,5 mm²**
Max. Stranded Conductor Cross-Sectional Area with Ferrule	**6 mm²**
Min. Stripping Length	**11 mm**
Max. Stripping Length	**13 mm**
Internal Cylindrical Indicator	**A5**
2 Stranded Conductors of the Same Cross-Section with Plastic-Collared Twin Ferrule	**1,5 mm²**

DIMENSIONS

Width	**8 mm**
Length	**105,4 mm**
Height MR 35x7.5	**46,2 mm**
Height MR 35x15	**53,7 mm**

Certificates

CE EAC DNV ROHS UKRAYNA

UKCA

cULus

CE

Conductor Cross-section	AWG 20-8
Nominal Current	48 A
Nominal Voltage	600 V

Accessories

END STOP



Product Code: 495049

KD 3 Grey



Product Code: 495059

KD 4 Grey



Product Code: 495219

KD 7 Grey

ZINC COATED



Product Code: 500601

MR 35x7.5 Straight (1m) Zinc Coated Rail



Product Code: 500604

MR 35x7.5 Slotted DIN Rail (2 m), Galvanized



Product Code: 500609

MR 35x15 Slotted (2m) Zinc Coated Rail



Product Code: 500602

MR 35x7.5 Slotted (1m) Zinc Coated Rail



Product Code: 500603

MR 35x7.5 Straight (2m) Zinc Coated Rail



Product Code: 500606

MR 35x15 Straight (1m) Zinc Coated Rail



Product Code: 500608

MR 35x15 Straight (2m) Zinc Coated Rail

ÇINKO KAPLI



Product Code: 500607

MR 35x15 Slotlu (1m) Çinko Kaplı Ray

GALVANIZED



Product Code: 500602E

MR 35x7.5 Slotted (1m) Rail (Galvanized)



Product Code: 500603E

MR 35x7,5 Plain (2m) Rail (Galvanized)



Product Code: 500604E

MR 35x7,5 SLOT (2m) RAIL (GALVANIZED)



Product Code: 500609E

MR 35x15 Slotted (2m) Rail (Galvanized)

SCREWDRIVERS



Product Code: 561150

KT-D 3 (0,6 x Ø3,5)

TERMINAL THERMAL PRINTER LABELS



Product Code: 812750

D-NS 8x10

END PLATE/COVER

Product Code: 446690

NPP/PYK 6C Beige

Product Code: 446699

NPP/PYK 6C Grey

PLUG-IN CROSS CONNECTOR



Product Code: 476242

UK 6/2



Product Code: 476243

UK 6/3



Product Code: 476244

UK 6/4



Product Code: 476249

UK 6/10

TEST SOCKETS



Product Code: 498559

PYK TEST Grey

TERMINAL STRIP LABELS

Product Code: 1020100

SLF-P1 W 11,2mm x 15m