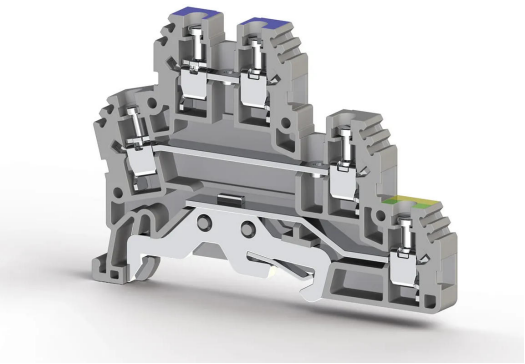

TERMINAL BLOCKS > SCREW TYPE TERMINAL BLOCKS > MULTILEVEL TERMINALS

PUK 2T Grey

Stock Keeping Unit (SKU): 324209

Screw Type, 2,5 mm² 3 layer terminal block (2 phase and ground)

Commercial Information

Product Sales Code	**324209**
Package Unit	**20 pcs.**
Customs Tariff Number	**853690950000**
Weight Per Unit Including Packaging	**0.02255 kg.**

Technical Information

PRODUCT SPECIFICATIONS	
Number of Connections	**5**
Color	**Grey**
Number of Levels	**3**
Insulation Material	**PA**
UL 94 Flammability Class	**V2**
Impulse Voltage Category	**III**
Insulation Material Group	**I**
Pollution Degree	**3**
Protective Conductor Type	**PE**
Connection According to Standard	**IEC 60947-7-1/ IEC 60947-7-2**
Continuous Operating Temperature Max.	**120 °C**
Continuous Operating Temperature Min.	**-55 °C**

ELECTRICAL SPECIFICATIONS

Nominal Impulse Voltage	**6 Kv**
Nominal Current	**24 A**
Nominal Voltage	**440 V**
Maximum Load Current	**32 A**

CONNECTION DATA

Connection Type	**Screw Connection**
Min. Solid Conductor Cross-Sectional Area	**0,2 mm²**
Max. Solid Conductor Cross-Sectional Area	**4 mm²**
Conductor Cross-Section AWG/kcmil Min.	**24 AWG**
Conductor Cross-Section AWG/kcmil Max.	**12 AWG**
Min. Stranded Conductor Cross-Sectional Area	**0,2 mm²**
Max. Stranded Conductor Cross-Sectional Area	**4 mm²**
Min. Stranded Conductor Cross-Sectional Area with Ferrule	**0,25 mm²**
Max. Stranded Conductor Cross-Sectional Area with Ferrule	**2,5 mm²**
Min. for 2 Stranded Conductors of the Same Cross-Section with Plastic-Collared Twin Ferrule	**0,5 mm²**
Max. for 2 Stranded Conductors of the Same Cross-Section with Plastic-Collared Twin Ferrule	**1,5 mm²**
Min. Stripping Length	**7 mm**
Max. Stripping Length	**8 mm**
Internal Cylindrical Indicator	**A3**
Tightening Torque Min.	**0,4 Nm**
Tightening Torque Max.	**0,6 Nm**

DIMENSIONS

Width	**6 mm**
Length	**71,70 mm**
Height MR 35x7.5	**52,50 mm**
Height MR 35x15	**60 mm**

Certificates

cULus | ATEX | CE | EAC | TSE

ROHS | UKRAYNA | UKCA

cULus

Conductor Cross-section	AWG 24-12
Nominal Current	24 A
Nominal Voltage	300 V

ATEX

Nominal Current	24 A
Nominal Voltage	400 V

Accessories

ZINC COATED



Product Code: 500601

MR 35x7.5 Straight (1m) Zinc Coated Rail



Product Code: 500604

MR 35x7.5 Slotted DIN Rail (2 m), Galvanized



Product Code: 500609

MR 35x15 Slotted (2m) Zinc Coated Rail



Product Code: 500602

MR 35x7.5 Slotted (1m) Zinc Coated Rail



Product Code: 500603

MR 35x7.5 Straight (2m) Zinc Coated Rail



Product Code: 500606

MR 35x15 Straight (1m) Zinc Coated Rail



Product Code: 500608

MR 35x15 Straight (2m) Zinc Coated Rail

ÇINKO KAPLI



Product Code: 500607

MR 35x15 Slotlu (1m) Çinko Kaplı Ray

GALVANIZED



Product Code: 500602E

MR 35x7.5 Slotted (1m) Rail (Galvanized)



Product Code: 500603E

MR 35x7,5 Plain (2m) Rail (Galvanized)



Product Code: 500604E

MR 35x7,5 SLOT (2m) RAIL (GALVANIZED)



Product Code: 500609E

MR 35x15 Slotted (2m) Rail (Galvanized)

SCREWDRIVERS



Product Code: 561230

IKT-D 3 (0,6 x Ø3,5)

TEST SOCKETS

Product Code: 493023

TF (Ø 2,3)



Product Code: 490030

TSK 3 (Ø2,3)

TERMINAL THERMAL PRINTER LABELS



Product Code: 810300

D-NS 5x6

END STOP



Product Code: 495059

KD 4 Grey



Product Code: 495219

KD 7 Grey

TERMINAL BLOCKS

Product Code: 505330

DG 6/5

END PLATE/COVER



Product Code: 450149

NPP/PUK 2T Grey

SCREW TYPE CROSS CONNECTOR



Product Code: 480132

UK 2,5/2



Product Code: 480133

UK 2,5/3



Product Code: 480134

UK 2,5/4



Product Code: 480139

UK 2,5/10