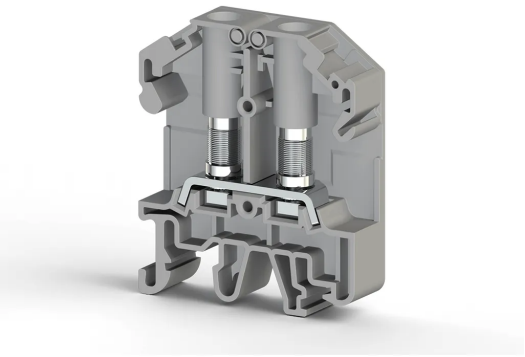

TERMINAL BLOCKS > BOLT TYPE TERMINAL BLOCKS > FEED THROUGH TERMINALS

PB 6T/NM

Stock Keeping Unit (SKU): 308019

Ring Type, 6 mm² feed-through terminal block (compatible with test plug) (V0)

Commercial Information

Product Sales Code	**308019**
Package Unit	**40 pcs.**
Customs Tariff Number	**853690950000**
Weight Per Unit Including Packaging	**0.02 kg.**

Technical Information

PRODUCT SPECIFICATIONS	
Number of Connections	**2**
Number of Levels	**1**
Insulation Material	**PA**
UL 94 Flammability Class	**V0**
Impulse Voltage Category	**III**
Insulation Material Group	**I**
Pollution Degree	**3**
Connection According to Standard	**IEC 60947-7-1**
Continuous Operating Temperature Max.	**130 °C**
Continuous Operating Temperature Min.	**-60 °C**

ELECTRICAL SPECIFICATIONS	
Nominal Impulse Voltage	**8 Kv**
Nominal Current	**41 A**

Nominal Voltage	**800 V**

CONNECTION DATA

Connection Type	**Bolt Connection**
Min. Solid Conductor Cross-Sectional Area	**0,5 mm²**
Max. Solid Conductor Cross-Sectional Area	**6 mm²**
Conductor Cross-Section AWG/kcmil Min.	**22 AWG**
Conductor Cross-Section AWG/kcmil Max.	**8 AWG**
Min. Stranded Conductor Cross-Sectional Area	**0,5 mm²**
Max. Stranded Conductor Cross-Sectional Area	**6 mm²**
Tightening Torque Min.	**0,8 Nm**
Tightening Torque Max.	**1,2 Nm**
Min. Hole Diameter	**4,2 mm**

DIMENSIONS

Width	**11,00 mm**
Length	**44,70 mm**
Height MR 35x7.5	**53,50 mm**
Height MR 35x15	**61,00 mm**
Height MR 32	**58,10 mm**

Certificates

CE | **ROHS** | **UKCA** | **CSA** | **cULus**

CE

Conductor Cross-section	AWG 22 - 8
Nominal Current	45 A
Nominal Voltage	600 V

ROHS

Conductor Cross-section	AWG 22 - 8

Nominal Current	45 A
Nominal Voltage	600 V

Accessories

END STOP



Product Code: 495049

KD 3 Grey



Product Code: 495059

KD 4 Grey



Product Code: 495219

KD 7 Grey

ZINC COATED



Product Code: 500601

MR 35x7.5 Straight (1m) Zinc Coated Rail



Product Code: 500604

MR 35x7.5 Slotted DIN Rail (2 m), Galvanized



Product Code: 500609

MR 35x15 Slotted (2m) Zinc Coated Rail



Product Code: 500602

MR 35x7.5 Slotted (1m) Zinc Coated Rail



Product Code: 500603

MR 35x7.5 Straight (2m) Zinc Coated Rail



Product Code: 500606

MR 35x15 Straight (1m) Zinc Coated Rail



Product Code: 500608

MR 35x15 Straight (2m) Zinc Coated Rail

ÇINKO KAPLI



Product Code: 500607

MR 35x15 Slotlu (1m) Çinko Kaplı Ray

GALVANIZED



Product Code: 500602E

MR 35x7.5 Slotted (1m) Rail (Galvanized)



Product Code: 500603E

MR 35x7,5 Plain (2m) Rail (Galvanized)



Product Code: 500604E

MR 35x7,5 SLOT (2m) RAIL (GALVANIZED)



Product Code: 500609E

MR 35x15 Slotted (2m) Rail (Galvanized)

SCREWDRIVERS



Product Code: 561250

IKT-D 5 (1,0 x Ø5,5)

TEST SOCKETS



Product Code: 493050

TF (Ø 4)

TERMINAL THERMAL PRINTER LABELS



Product Code: 812750

D-NS 8x10

END PLATE/COVER



Product Code: 451019

NPP/PB6/NM Grey

SEPARATION PLATE



Product Code: 464009

APP/PB 2,5-PB6/NM Grey

COMB CROSS CONNECTOR



Product Code: 479002

TKO PB6/2/NM



Product Code: 479003

TKO PB6/3/NM



Product Code: 479004

TKO PB6/4/NM



Product Code: 479007

TKO PB6/7/NM



Product Code: 479009

TKO PB6/10/NM