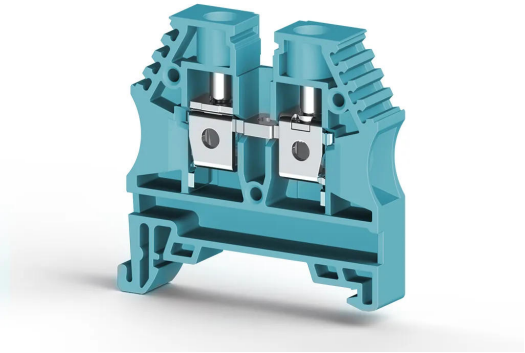

TERMINAL BLOCKS > SCREW TYPE TERMINAL BLOCKS > FEED THROUGH TERMINALS

AVK 6 Blue

Stock Keeping Unit (SKU): 304141RP

6mm² Screw type,single deck feed through terminal blo

Commercial Information

Product Sales Code	**304141RP**
Package Unit	**60 pcs.**
Customs Tariff Number	**853690950000**
Weight Per Unit Including Packaging	**0.0121 kg.**

Technical Information

PRODUCT SPECIFICATIONS	
Number of Connections	**2**
Color	**Blue**
Number of Levels	**1**
Insulation Material	**PA**
UL 94 Flammability Class	**V2**
Impulse Voltage Category	**III**
Insulation Material Group	**I**
Pollution Degree	**3**
Connection According to Standard	**IEC 60947-7-1**
Continuous Operating Temperature Max.	**120 °C**
Continuous Operating Temperature Min.	**-55 °C**

ELECTRICAL SPECIFICATIONS	
Nominal Impulse Voltage	**8 Kv**

Nominal Current	**41 A**
Nominal Voltage	**630 V**
Maximum Load Current	**57 A**

CONNECTION DATA

Connection Type	**Screw Connection**
Min. Solid Conductor Cross-Sectional Area	**0,2 mm²**
Max. Solid Conductor Cross-Sectional Area	**10 mm²**
Conductor Cross-Section AWG/kcmil Min.	**24 AWG**
Conductor Cross-Section AWG/kcmil Max.	**8 AWG**
Min. Stranded Conductor Cross-Sectional Area	**0,2 mm²**
Max. Stranded Conductor Cross-Sectional Area	**10 mm²**
Min. Stranded Conductor Cross-Sectional Area with Ferrule	**0,25 mm²**
Max. Stranded Conductor Cross-Sectional Area with Ferrule	**6 mm²**
Min. for 2 Stranded Conductors of the Same Cross-Section with Plastic-Collared Twin Ferrule	**0,5 mm²**
Max. for 2 Stranded Conductors of the Same Cross-Section with Plastic-Collared Twin Ferrule	**4 mm²**
Min. Stripping Length	**10 mm**
Max. Stripping Length	**12 mm**
Internal Cylindrical Indicator	**B5**
Tightening Torque Min.	**0,8 Nm**
Tightening Torque Max.	**1,2 Nm**

DIMENSIONS

Width	**8 mm**
Length	**44,2 mm**
Height MR 35x7.5	**44,4 mm**
Height MR 35x15	**51,9 mm**

Certificates

CSA | CE | EAC | DNV | TSE

ROHS | UKRAYNA | UKCA | cULus | VDE

ATEX

CSA

Conductor Cross-section	AWG 28-8
Nominal Current	40 A
Nominal Voltage	600 V
Tightening Torque	1,2 Nm

CE

Conductor Cross-section	AWG 26-8
Nominal Current	50 A
Nominal Voltage	600 V

EAC

Conductor Cross-section	6 mm²
Nominal Current	41 A
Nominal Voltage	630 V

DNV

Nominal Current	41 A
Nominal Voltage	630 V

Accessories

END PLATE/COVER



Product Code: 444120

NPP/AVK 2,5-10 Grey



Product Code: 444121

NPP/AVK 2,5-10 Blue

SEPARATION PLATE



Product Code: 462120

APP/AVK 2,5-10 Grey



Product Code: 467919

AD 1 Grey

MARKING



Product Code: 498130

IP 2S Printed



Product Code: 498140

IP 2



Product Code: 498289

ETS Grey

END STOP



Product Code: 495049

KD 3 Grey



Product Code: 495059

KD 4 Grey



Product Code: 495219

KD 7 Grey



Product Code: 495229

KD 8 Grey

ZINC COATED



Product Code: 500601

MR 35x7.5 Straight (1m) Zinc Coated Rail



Product Code: 500604

MR 35x7.5 Slotted DIN Rail (2 m), Galvanized



Product Code: 500609

MR 35x15 Slotted (2m) Zinc Coated Rail



Product Code: 500602

MR 35x7.5 Slotted (1m) Zinc Coated Rail



Product Code: 500603

MR 35x7.5 Straight (2m) Zinc Coated Rail



Product Code: 500606

MR 35x15 Straight (1m) Zinc Coated Rail



Product Code: 500608

MR 35x15 Straight (2m) Zinc Coated Rail

ÇINKO KAPLI



Product Code: 500607

MR 35x15 Slotlu (1m) Çinko Kaplı Ray

GALVANIZED



Product Code: 500602E

MR 35x7.5 Slotted (1m) Rail (Galvanized)



Product Code: 500603E

MR 35x7,5 Plain (2m) Rail (Galvanized)



Product Code: 500604E

MR 35x7,5 SLOT (2m) RAIL (GALVANIZED)



Product Code: 500609E

MR 35x15 Slotted (2m) Rail (Galvanized)

SCREWDRIVERS



Product Code: 561240

IKT-D 4 (0,8 x Ø4,0)

TEST SOCKETS

Product Code: 493023

TF (Ø 2,3)



Product Code: 493050

TF (Ø 4)



Product Code: 490070

TSK 7 (Ø4)



Product Code: 490040

TSK 4 (Ø2,3)

TERMINAL THERMAL PRINTER LABELS



Product Code: 812750

D-NS 8x10

SCREW TYPE CROSS CONNECTOR



Product Code: 474142

UK 6/2



Product Code: 474143

UK 6/3



Product Code: 474144

UK 6/4



Product Code: 474149

UK 6/10

COMB CROSS CONNECTOR



Product Code: 476282

TKO 6/2



Product Code: 476283

TKO 6/3



Product Code: 476284

TKO 6/4



Product Code: 476289

TKO 6/10